HOSHIZAKI

FIE-170SDA-GN

Model Number
97000006

412L3 Door Underbench Gastronorm Freezer

PRODUCT FEATURES

- Stainless steel interior and exterior.
- Programmable Digital controller and display.
- 6 x 1/1 Gastronorm adjustable shelves with rails
- Compact slide out refrigeration unit for quick maintenance.
- 2 years parts and labour warranty.
- Comes standard with 4 x 115mm lockable castors (not legs).
- Optional Adjustable legs 150 – 180mm (Sold separately)

TECHNICAL DRAWING

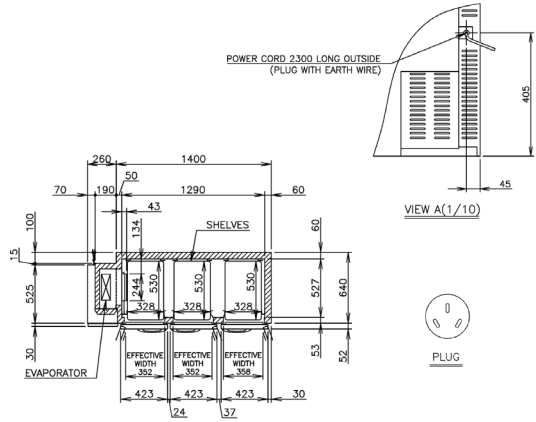

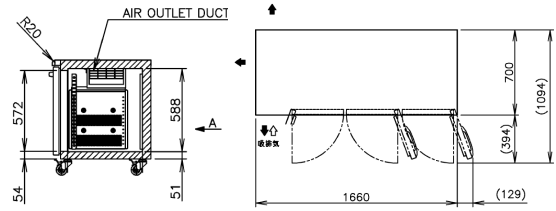

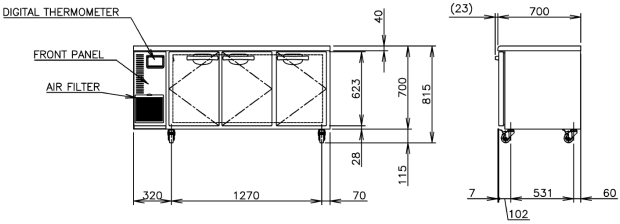

PRODUCT SPECIFICATION

Exterior	Stainless Steel, Galvanized Steel (Rear /Bottom)
Interior	Stainless Steel, ABS Plastic
Max Storage Capacity	412L
Temperature Control	Microprocessor controlled Adjustable from -25 to -7°C
Drain Evaporator Pan	Fin & Tube type
Outside Dimensions	1660mm (W) x 700mm (D) x 815mm (H)
Inside Dimensions	1290mm (W) x 527mm (D) x 588mm (H)
Refrigeration System	Forced Air Circulation
Weight Net	103kg
AC Supply Voltage	1 PHASE 220-240V 50Hz /10amp Plug
Amperage	Rated: 3.4A Starting: 14.8A
Refrigerant	R134a
Operating Conditions	Ambient Temp.: 5-43°C Voltage Range: Rated Voltage ±6%
GEMS Number	ARC3713

FACTORY Parts & Labour 2 YR Entire Unit WARRANTY

For free 6 month extended warranty, register online within 4 weeks of purchase date.
hoshizaki.com.au

Descriptions and specifications are subject to change at any time, without notice. Illustrations for demonstration purposes. Copyright © 2023 Hoshizaki Lancer Pty Ltd. All right reserved.