# HOSHIZAKI

# FT-156MA-A

## 318L2 Door Underbench Freezer

Model Number
97000264

## PRODUCT FEATURES

- Complete with stainless steel top.
- Standard with 4 shelves / 2 doors.
- Programmable electronic controller and display.
- 2 years parts and labour warranty.
- Comes standard with 4 x lockable (115 mm) castors (not legs).
- Optional Adjustable legs 150 – 180mm (Sold separately).

## TECHNICAL DRAWING

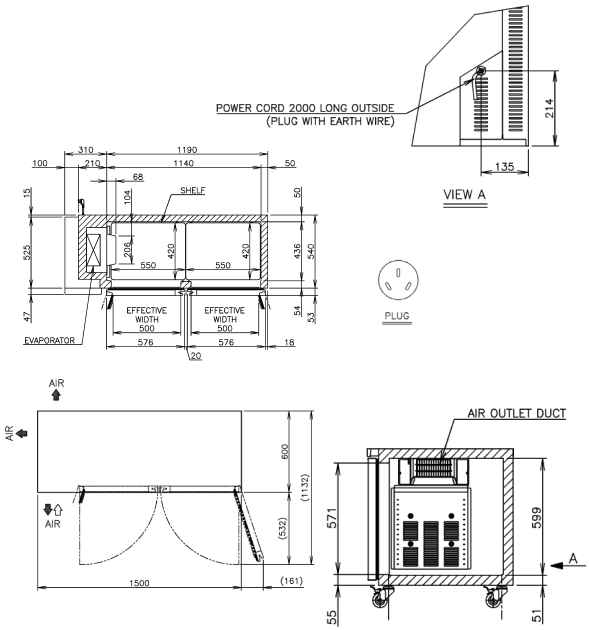


## PRODUCT SPECIFICATION

| | |
|---|---|
| Exterior | Stainless Steel,<br>Galvanized Steel (Rear /Bottom) |
| Interior | Stainless Steel, ABS Plastic |
| Max Storage Capacity | 318L |
| Temperature Control | Microprocessor controlled Adjustable from -23 to -7°C |
| Drain Evaporator Pan | Fin & Tube type |
| Outside Dimensions | 1500mm (W) x 600mm (D) x 815mm (H) |
| Inside Dimensions | 1140mm (W) x 436mm (D) x 599mm (H) |
| Refrigeration System | Forced Air Circulation |
| **Weight Net** | 81kg |
| **AC Supply Voltage** | 1 PHASE 220-240V 50Hz /10amp Plug |
| Amperage | Rated: 2.6A |
| Refrigerant | R404A/160g |
| Operating Conditions | Ambient Temp.: 5-38°C<br>Voltage Range: Rated Voltage ±6% |

FACTORY Parts & Labour 2 YR Entire Unit WARRANTY

For free 6 month extended warranty, register online within 4 weeks of purchase date.
hoshizaki.com.au

Descriptions and specifications are subject to change at any time, without notice. Illustrations for demonstration purposes. Copyright © 2023 Hoshizaki Lancer Pty Ltd. All right reserved.